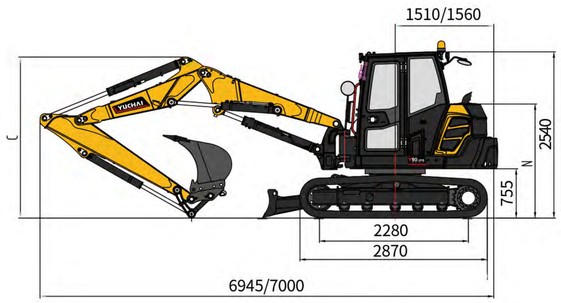

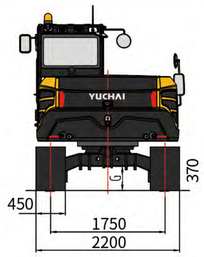

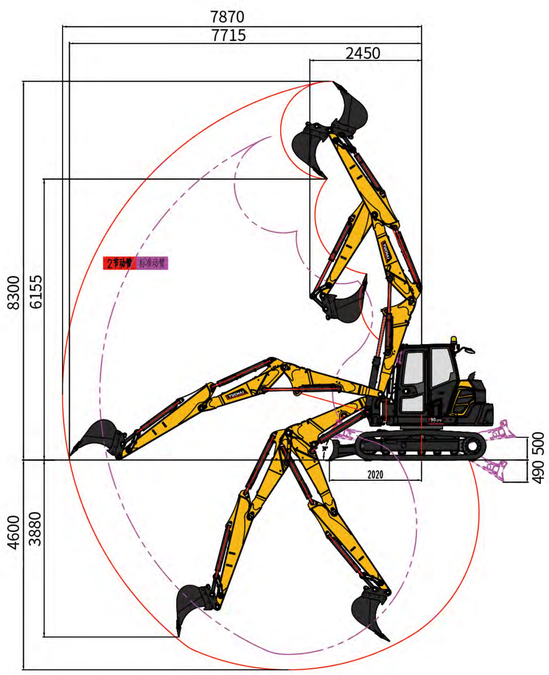

Specifications are subject to change without prior notice .

Y90-2PB | Y86 Technical Specification

Basic parameters	Y90-2PB | Y86
Machine weight	9200kg/9500kg (+extra counter weight) | Y90-2PB
Machine weight	8900kg/9200kg (+extra counter weight) | Y86
Bucket capacity	0.28 m^3
Width of bucket	800mm
Performance parameters	
Engine model	Yanmar 4TNV98CT-VSY
Emission Standard	Euro V
Engine power	53.7/2100 kW/rpm
Max. Gradeability	30° (58%)
Max. digging force of arm	41 kN | 46.4 KN
Max. digging force of bucket	70 kN
Traveling speed	76 kN
Max. hauling force	2.7/4.8 km/h
Slewing speed of platform	10.5 rpm
Operating parameters	**Y90-2PB | Y86**
Max. digging height	8300 mm | 7085 mm
Max. digging depth	4600mm | 4260 mm
Max. digging radius	7870mm | 7050 mm
Max. digging radius on ground level	7715mm | 6880 mm
Max. dumping height	6155mm | 5030 mm
Min. slewing radius	2450mm | 2415 mm
Max. vertical digging depth	3880mm | 2955 mm
Transportation dimensions	
Overall length	6945kg/7000kg (+extra counter weight) | Y90-2PB
Overall length	6440kg/6490kg (+extra counter weight) | Y86
Overall width	2200mm
Overall height	2540mm
Other Parameters	
Width of undercarriage	2200mm
Length of track	2870mm
Width of track	450mm
Minimum ground clearance	370mm
Height between platform and ground	755mm
Platform tail turning radius	1510mm/1560mm
Length to center of rollers	1750mm
Fuel tank capacity	115L
Hydraulic oil tank capacity	90L
Track gauge	2280mm
Working Pressure	29.4MPa
Flow rate	230L/min
AUX1 Pressure/ Flow rate	24MPa/60L/min
AUX2 Pressure/ Flow rate	24MPa/130L/min
Arm length	2100mm(Y90-2PB) | 1750mm(Y86)
Boom length	Boom 1: 2183 + Boom 2: 2028 (Y90-2PB) / 3520mm (Y86)
Steering head angle	70° (L) /60° (R)

Tymbia

by YUCHAI

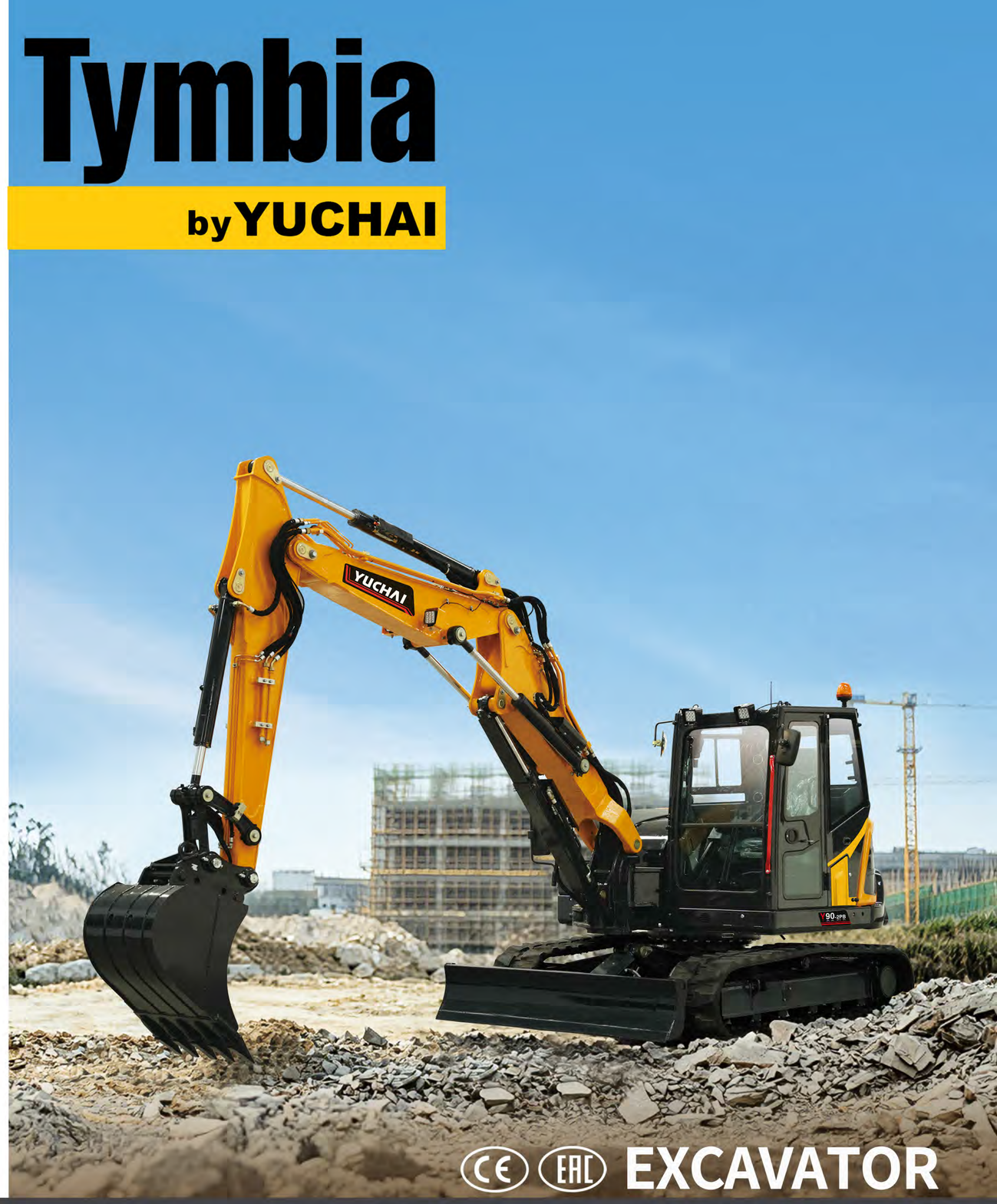

CE EAC EXCAVATOR

Machine weight : 9200 kg | Engine model : Yanmar 4TNV98CT

Bucket capacity: 0.28 m^3 | Engine power : 53.7kW/2100rpm

Overall dimensions (L x W x H): 6945 mm x 2200 mm x 2540 mm

Y90-2PB

info@tymbia.com | www.tymbia.com